# Exemplos de aplicação do Simulador de Processos ASPEN PLUS

## V. Operações sólido - fluido

## Plano de resolução

**Template**

- Unidades — Generic metric
- Run Type — **Flowsheet**

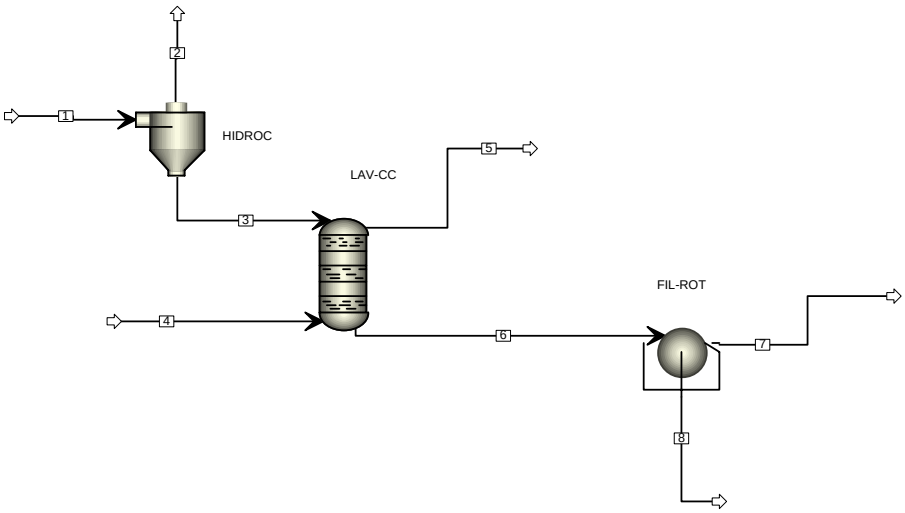


⇨ Data Menu — Setup — Título FILTRO — Stream class **MIXNCPSD**

- Components — POLIMERO Nonconventional
- Properties — Método de cálculo — **NRTL-2**
  - Advanced — NC-Props — **ENTHGEN** **DNSTYGEN** — **GENANAL** (ver descrição)
  - Parameters — Pure comp: New – NC1 — **DENGEN** : 80 lb/cuft **HCGEN** : 0,45 cal/gm-K
- Streams — Substreams: MIXED NCPSD — **PSD** — Comp Attrib

⇨ Streams 1 e 4 — Substreams MIXED / NCPSD caudais 100×

Gabriela Bernardo Gil – 1999 / 2003
rev. Jorge Vasconcelos - 2006

Blocks
HIDROC — Design

Blocks
LAV-CC - **CCD** — Specifications — Streams – definir em Flowsheet
3 – stage 1 under; 4 – stage 3 over
5 – stage 1 over; 6 – stage 3 under

⇨ **Flowsheeting Options** — **Design Specification**

New ID **DS1**

Define
New Var. – **Q5** (ACET)
New Var. – **Q3** (ACET)

Spec: **Q5/Q3**
target: 0,985 ± 0,0005

⇨ Vary : **Q4** (AGUA)
100× 30000-50000 kg/h

⇨ Blocks
FIL-ROT — **Design** — Specifications — Filter Cake: 95% sól.

**Simulation**
parameters D, W — **Model Analysis Tools**

**Sensitivity**

Vary
DIAM

Tabulate: P6 – P7; P6 - P8
Plot – X=D ; Y=P6-P8